Explanation

Talha Yousaf

2025-CE-93

Experiment 1: Verification of KCL (Kirchhoff's Current Law)

Objective

To verify **Kirchhoff's Current Law (KCL)** by measuring currents in a circuit and showing that:

I1=I2+I3

Theory

Kirchhoff's Current Law states that the total current entering a junction is equal to the total current leaving the junction**.**

In this circuit, current I1 enters the node and splits into two currents I2 and I3.

Therefore:

I1=I2+I3

Procedure (Steps)

1. Open **Proteus software** and create a new schematic.
2. Place a **DC Power Supply (RPS)** in the circuit.
3. Add resistors:
    - **330 Ω** (left side)
    - **220 Ω** (right side)
    - **1 kΩ** (vertical branch)
    - **1 kΩ** (right vertical)
4. Connect the circuit exactly as shown in the diagram (forming a junction).
5. Place **ammeters**:
    - A1 to measure **I1**
    - A2 to measure **I2**
    - A3 to measure **I3**
6. Connect all components properly with **ground**.
7. Set the power supply to **5V**, run the simulation and note values of:
    - I1, I2, I3

8. Repeat the same steps for:
    - **15V**
    - **25V**
9. Record all readings in the table.

Calculations (Using Ohm's Law)

First find equivalent resistances:

Branch 1 (I2 path):

$R2=1k\Omega$

Branch 2 (I3 path):

$R3=220+1k=1220\Omega$

Total parallel resistance:

$1/Req=1/1000+1/1220$

Then total resistance:

$RT=330+Req$

Current Calculation

$I1=V/RT$

Then using current division:

$I2=I1\times R3/(R2+R3)$

$I3=I1\times R2/(R3+R2)$

Result

It is verified that:

$I1\approx I2+I3$

Hence, **KCL is verified**.

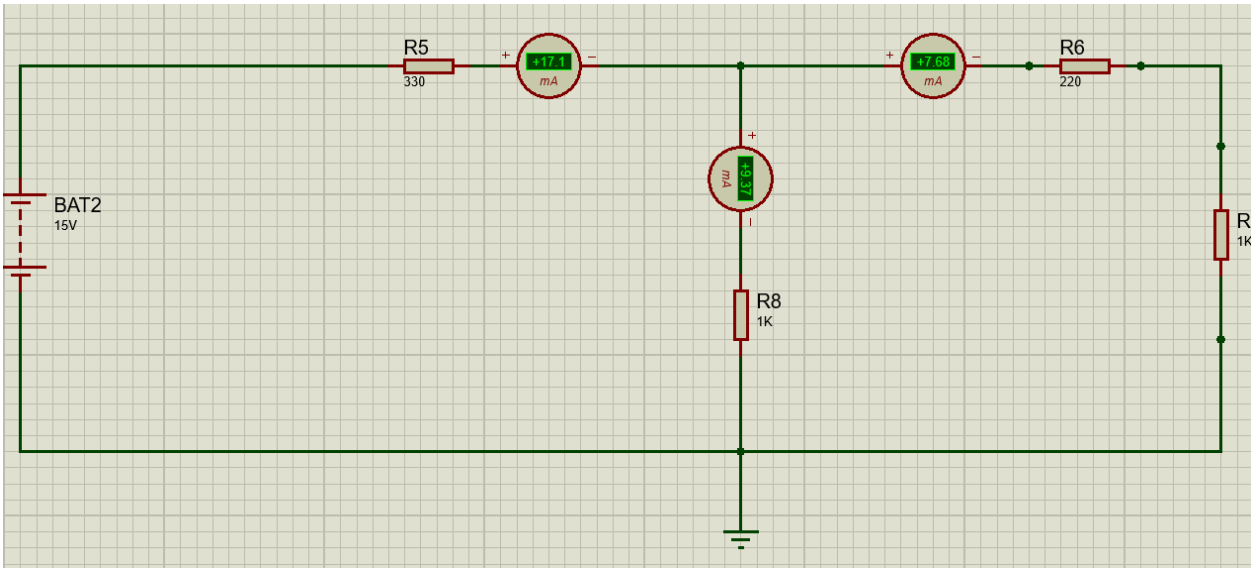
R5
330
+17.1
mA
+7.68
mA
R6
220
+9.37
mA
BAT2
15V
R8
1K
R
1K

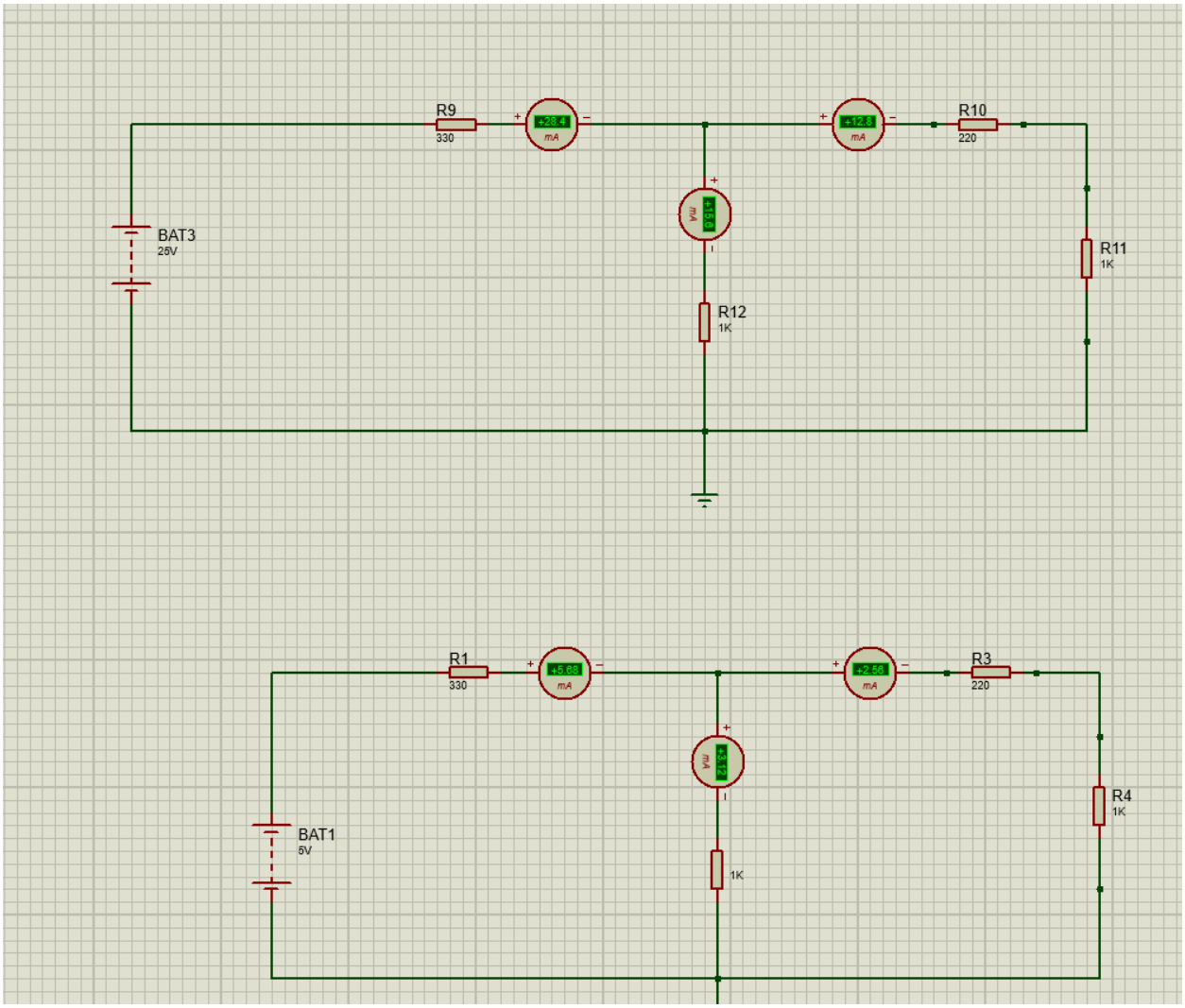
R9
330
+28.4
mA
+12.8
mA
R10
220
+15.6
mA
BAT3
25V
R11
1K
R12
1K
R1
330
+5.68
mA
+2.56
mA
R3
220
+1.53
mA
R4
1K
BAT1
5V
1K

Experiment 2: Verification of KVL (Kirchhoff's Voltage Law)

Objective

To verify **Kirchhoff's Voltage Law (KVL)** by measuring voltages and showing that:

E1=V1+V2+V3

Theory

Kirchhoff's Voltage Law states that **the sum of all voltages in a closed loop is equal to the source voltage**.

Procedure (Steps)

1. Open **Proteus software** and create a new circuit.
2. Place a **DC Power Supply (RPS)**.
3. Add resistors:
   - **330 Ω**
   - **220 Ω**
   - **1 kΩ**
4. Connect all resistors in the circuit as shown (loop form).
5. Place **voltmeters**:
   - V1 across **330 Ω**
   - V2 across **1 kΩ**
   - V3 across **220 Ω**
6. Connect ground properly.
7. Set supply voltage to:
   - **5V**, run simulation and note V1, V2, V3
8. Repeat for:
   - **10V**
   - **15V**
9. Record all readings.

Calculations

Total resistance:

RT=330+1000+220=1550Ω

Current in circuit:

I=V/RT

Voltage drops:

V1=I×330

V2=I×1000

V3=I×220

Verification

E1=V1+V2+V3

Result

It is observed that the sum of voltage drops across all resistors is equal to the input voltage.

Hence, **KVL is verified**.

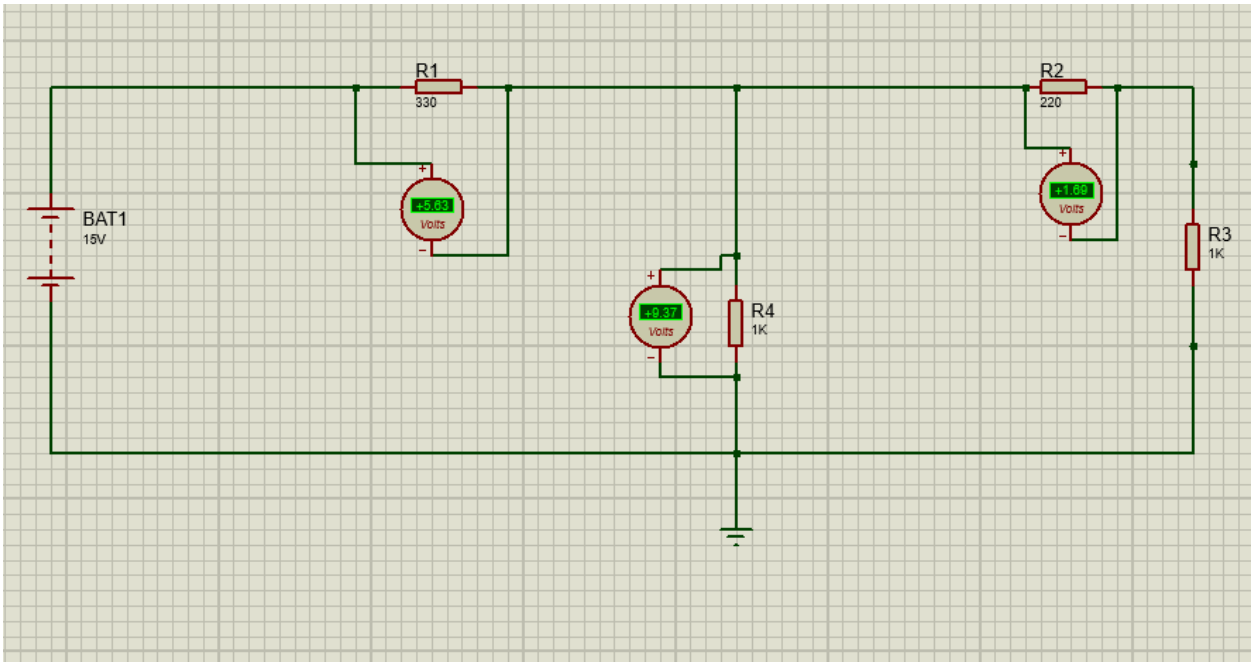

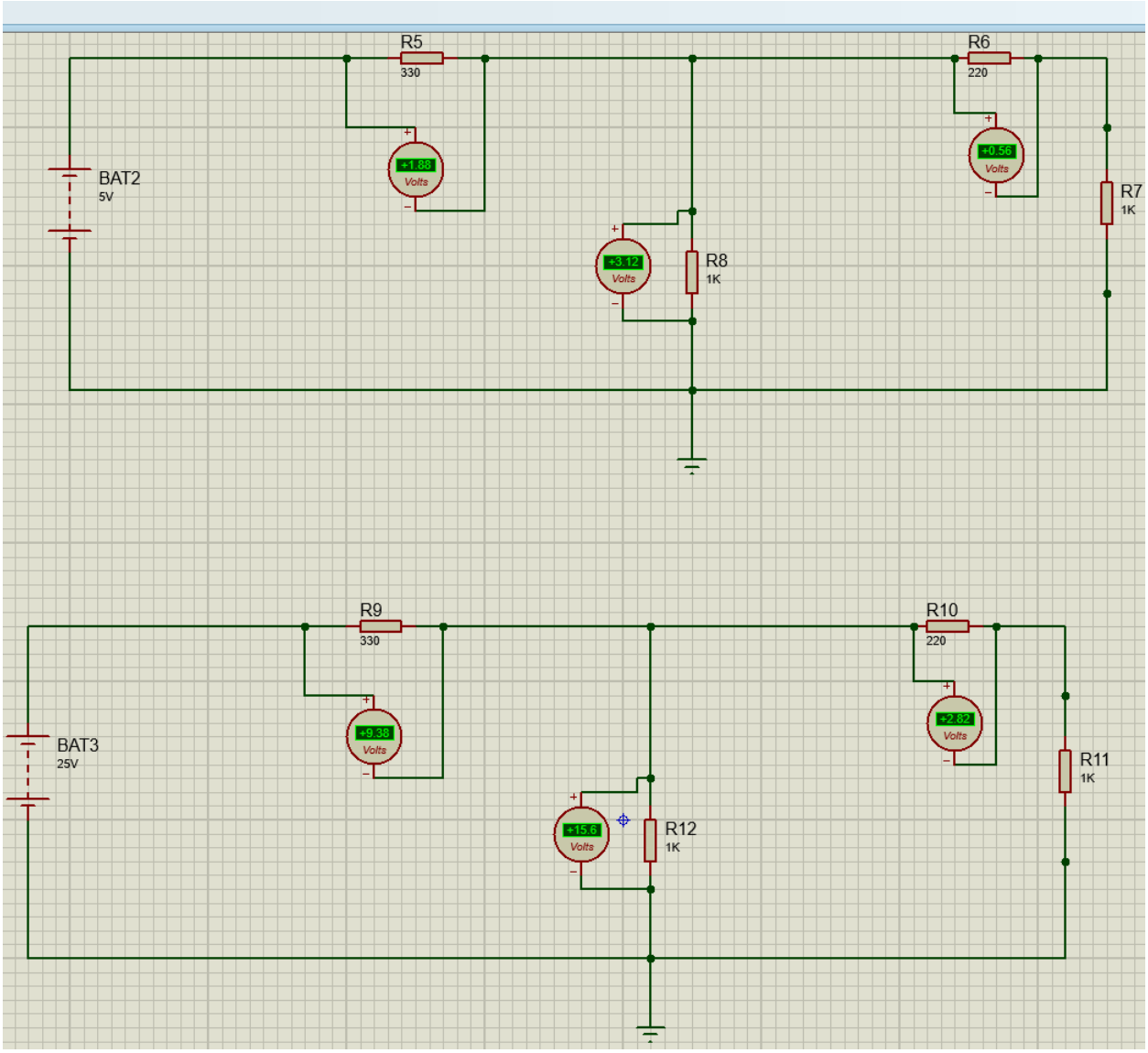
R5
330
R6
220
BAT2
5V
+1.88
Volts
+0.56
Volts
R7
1K
+3.12
Volts
R8
1K
R9
330
R10
220
BAT3
25V
+9.38
Volts
+2.82
Volts
R11
1K
+15.6
Volts
R12
1K